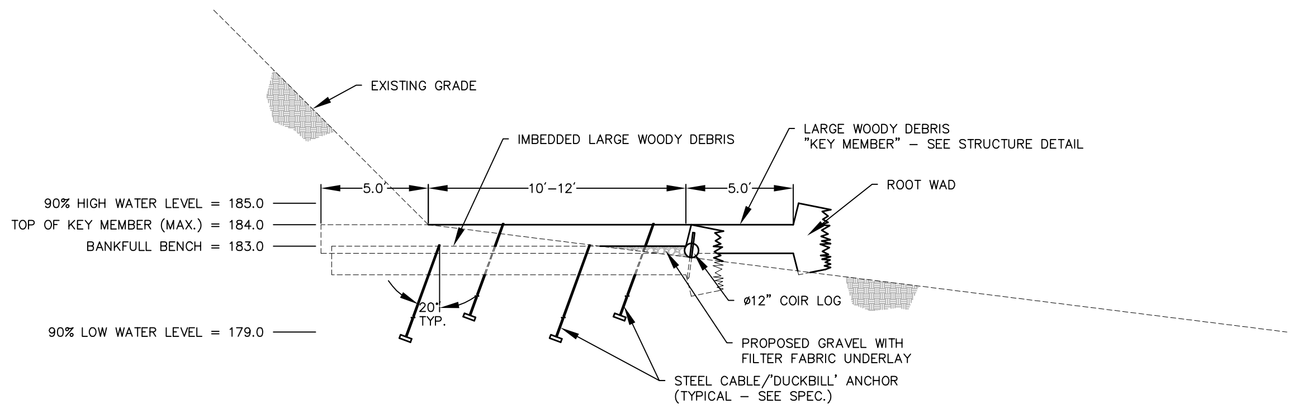

KEY MEMBER DETAIL
TYPICAL RESTORATION TREATMENT TYPE "A"
(UNDISTURBED UPPER SLOPE)

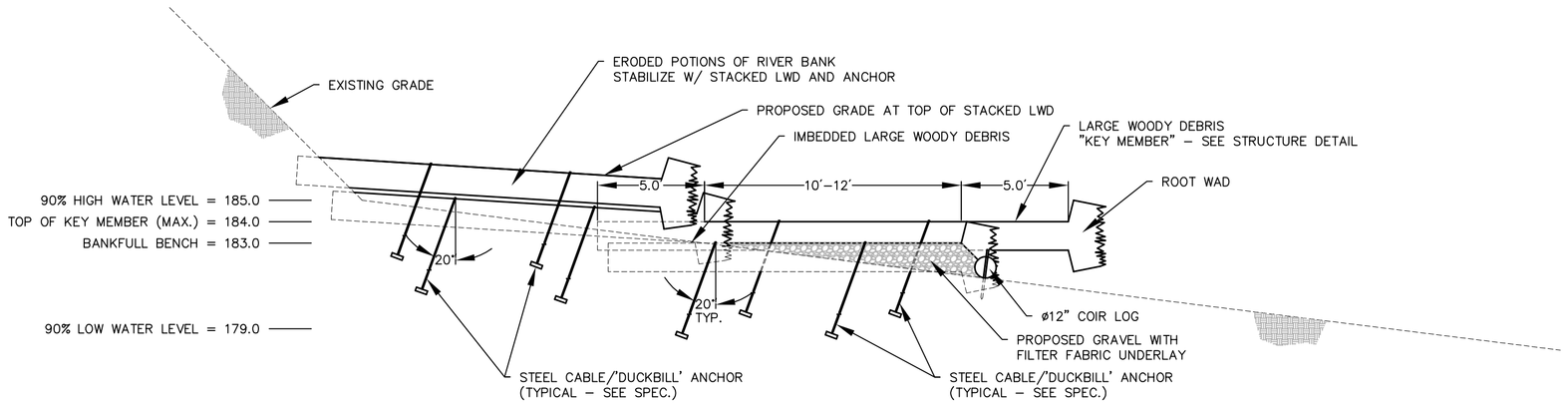

KEY MEMBER DETAIL
TYPICAL RESTORATION TREATMENT TYPE "B"
(ERODED AREAS TO BE STABILIZED)

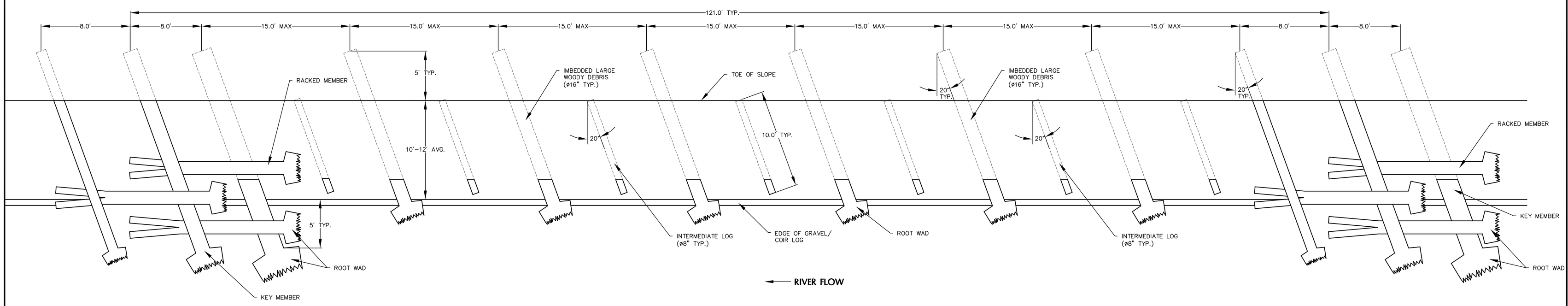

TYPICAL SPACING DETAIL
LARGE WOODY DEBRIS INSTALLATION
TYPICAL OF RESTORATION TREATMENT TYPES "A" & "B"

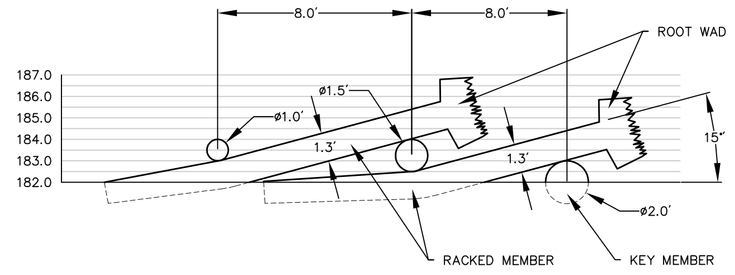

LARGE WOODY DEBRIS STRUCTURE DETAIL
CROSS SECTION OF TYPICAL LWD STRUCTURE
(APPROX. LWD DIAMETERS)

DEMONSTRATION OF LARGE WOODY DEBRIS BANK STABILIZATION
DRAFT - NOT FOR CONSTRUCTION

D&A Doucet & Associates, Inc.
136 West Street, Suite 103
Northampton, MA 01060
Phone: (413) 517-0133 Fax: (413) 517-0136
AUSTIN, TEXAS - NORTHAMPTON, MASSACHUSETTS - ROSEVILLE, CALIFORNIA
www.doucetandassociates.com

NO.	DATE	REVISION	APP.
6			
5			
4			
3			
2			
1			

DETAILS

FIRSTLIGHT POWER RESOURCES
PHASE III BANK RESTORATION
SPLIT RIVER FARM
GILL, MASSACHUSETTS

Scale:	N.T.S.
Designed:	CTS
Drawn:	CTS
Reviewed:	TJH
Date:	3/27/09

SHEET
BT-3
3 OF 10

Project No.:
655-005

Drawing: P:\655-005\dwg\working_drawings\655005_BASE.dwg